BAYVILLE SPIKE SPOT 12V

astro

GENERAL

LOCATION:	Exterior
CLASS:	CE (Class III)
IP RATING:	IP65
BATHROOM ZONE:	Zone 1, 2, 3
DRIVER REQUIRED:	Constant Voltage 12V
INSTALLATION ORIENTATION:	Ground/Floor
MAIN MATERIAL:	Metal - Aluminium
DIMENSIONS (mm):	H: 94 W: 75 D: 102
CUT OUT HOLE (mm):	-
RECESS DEPTH (mm):	-
FIRE RATING:	-
CABLE LENGTH (mm):	2000
GROSS WEIGHT (kg):	0.87

LAMP

LIGHT SOURCE:	LED
WATTAGE:	5W
LAMP INCLUDED:	Yes (Integral)
MAXIMUM LAMP LENGTH (mm):	-
LUMINOUS FLUX (lm):	465
COLOUR TEMP (K):	3000
CRI (Ra):	80
MACADAM ELLIPSE:	-
TILT ADJUSTABLE ANGLE (°):	90
ROTATION ADJUSTABLE ANGLE (°):	330
LIFETIME (hrs):	50000
BEAM ANGLE (°):	35

ELECTRICAL

SWITCHED:	No
DIMMABLE:	Yes
DIMMING METHOD:	Phase-Leading & Trailing Edge
SUPPLY FREQUENCY (Hz):	-
DRIVER/BALLAST VOLTAGE (V):	-
DRIVER LIFETIME (hrs):	-
EFFICACY (lm/W):	73

ADDITIONAL INFORMATION:

SHADE INCLUDED:	-
SHADE MATERIAL:	-
F MARK:	Suitable for mounting on flammable materials

CODE: 1401009 (8310)
FINISH: TEXTURED BLACK

CODE: 1401010 (8311)
FINISH: TEXTURED GREY

THIS PRODUCT IS SUITABLE FOR ONEROUS ENVIRONMENTS AND CAN BE INSTALLED WITHIN FIVE MILES OF THE COAST – THREE YEAR WARRANTY APPLIES.

Ce produit convient aux environnements difficiles et peut être installé à 8 km environ des côtes. Il bénéficie d'une garantie de trois ans.

Dieses Produkt ist für anspruchsvolle Umgebungen geeignet und kann innerhalb von fünf Meilen (acht Kilometern) von einer Küste entfernt installiert werden – es gilt eine dreijährige Garantie.

Questo prodotto è adatto per ambienti gravosi e può essere installato entro 8 chilometri dalla costa. Il prodotto è coperto da garanzia triennale.

TO MAINTAIN THIS PRODUCT TO ITS BEST CONDITION, PLEASE VIEW OUR CARE AND CLEANING GUIDE ON THE SUPPORT SECTION OF THE ASTRO WEBSITE.

Pour entretenir au mieux ce produit, veuillez consulter notre guide d'entretien et de nettoyage, dans la rubrique d'aide sur le site Web d'Astro.

Um dieses Produkt im besten Zustand zu erhalten, beachten Sie bitte unseren Leitfaden zu Pflege und Reinigung im Abschnitt „Support" auf der Astro-Website.

Per mantenere questo prodotto nelle sue migliori condizioni, consultare la nostra guida per la manutenzione e la pulizia nella sezione dedicata all'assistenza del sito Web Astro.

PRODUCT ELEVATIONS

astro

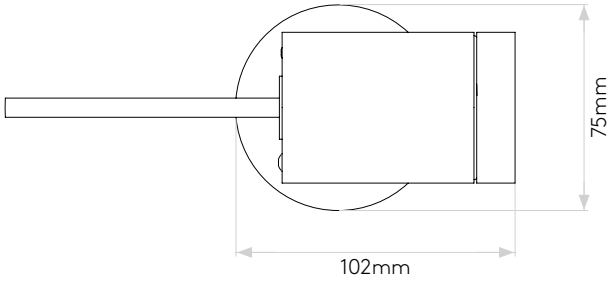

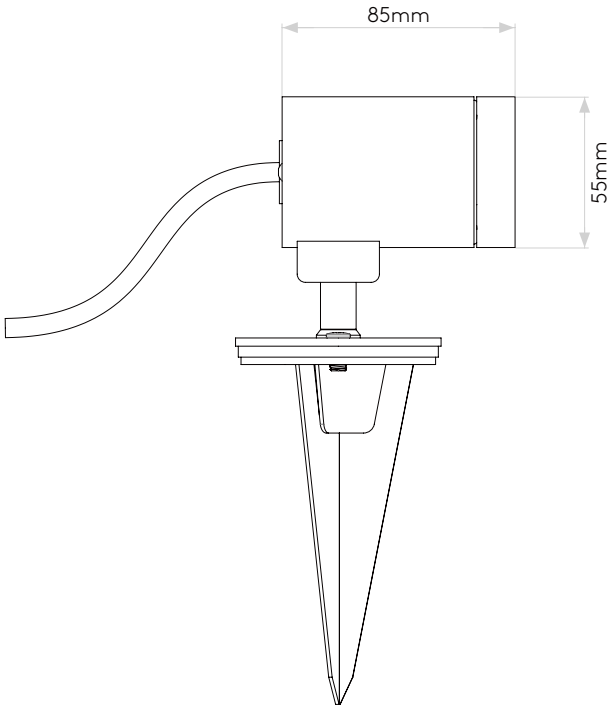

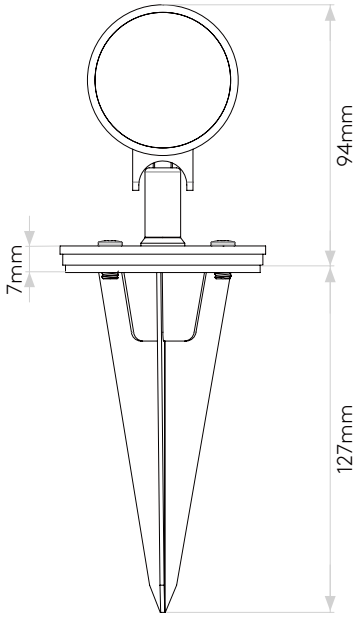

Please note that some dimensions may vary slightly due to manufacturing tolerances, this includes cable entry and fixing holes

Veuillez noter que certaines dimensions peuvent varier légèrement en raison des tolérances de fabrication, y compris l'entrée de câble et les trous de fixation.

Bitte beachten Sie, dass die Maße Fertigungstoleranzen unterliegen und daher in geringem Umfang von der angegebenen Größe abweichen können. Dies gilt auch für Kabeleingänge und Befestigungslöcher.

Si prega notare che possono esserci piccole variazioni in alcune dimensioni dovute alle tolleranze di produzione, queste includono l'ingresso del cavo e i fori di fissaggio.

CE